STAMINA®

Seated Upper Body Exercise Bike

Owner's Manual

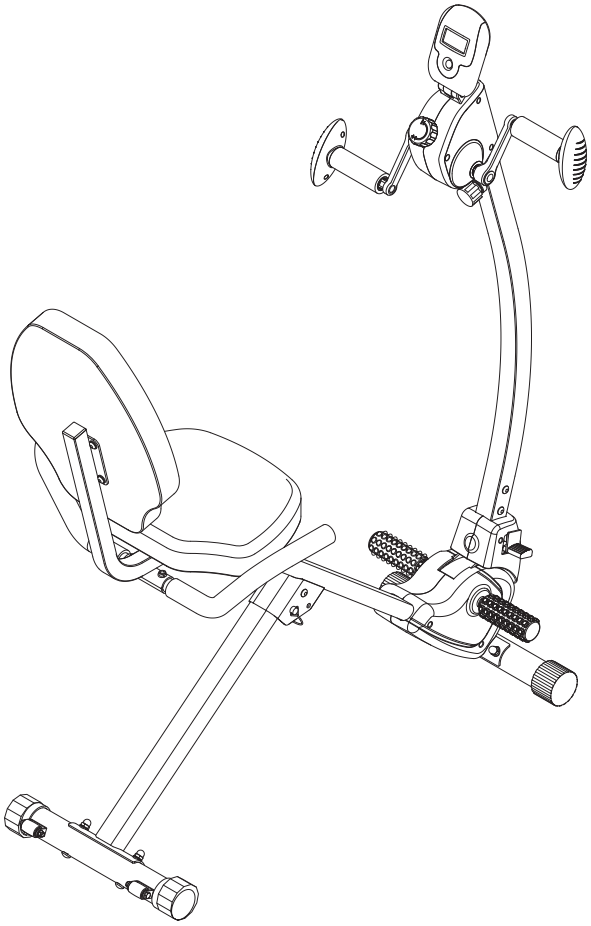

Product May Vary Slightly From Pictured.

CAUTION:
Weight on this product should not exceed 250 lbs.

This Product is Distributed Exclusively by

STAMINA®

2040 N Alliance Ave, Springfield, MO 65803
Customer Care
1 (800) 375-7520
www.staminaproducts.com

⚠ WARNING

Exercise can present a health risk. Consult a physician before beginning any exercise program with this equipment. If you feel faint or dizzy, immediately discontinue use of this equipment. Serious bodily injury can occur if this equipment is not assembled and used correctly. Serious bodily injury can also occur if all instructions are not followed. Keep others and pets away from equipment when in use. Always make sure all bolts and nuts are securely tightened prior to each use. Follow all safety instructions in this manual.

When calling for parts or service, please specify the following numbers:

Model#: 15-0301

S/N: _____

STAMINA PRODUCTS
MADE IN CHINA

©2019 Stamina Products, Inc.
2019, 05

TABLE OF CONTENTS

Safety Instructions 2
Before You Begin 4
Equipment Warning, Caution & Notice Labels ... 5
Hardware Identification Chart 6
Assembly Instructions 7
Set Up Instructions 12
Operational Instructions 13
Storage 15
Maintenance 15
Conditioning Guidelines 16
Warm-Up and Cool-Down 17
Product Parts Drawing 18
Parts List 19
Warranty 21
Notes 22
Fax/Mail Ordering Form 23

SAFETY INSTRUCTIONS

⚠ WARNING **Cancer and Reproductive Harm www.P65Warnings.ca.gov**

⚠ WARNING **Consult your physician before starting this or any exercise program. This is especially important if you are over the age of 35, have never exercised before, are pregnant, or suffer from any health problem. This product is for home use only. Do not use in institutional or commercial applications. Failure to follow all warnings and instructions could result in serious injury or death.**

⚠ WARNING **To reduce the risk of serious injury, read the following Safety Instructions before using the Stamina® Seated Upper Body Exercise Bike.**

1. Save these instructions and ensure that other exercisers read this manual prior to using the **Stamina® Seated Upper Body Exercise Bike** for the first time.
2. Read all warnings and cautions posted on the **Stamina® Seated Upper Body Exercise Bike.**
3. The **Stamina® Seated Upper Body Exercise Bike** should only be used after a thorough review of the Owner's Manual. Make sure that it is properly assembled and tightened before use.
4. We recommend that two people be available for assembly of this product.
5. Keep children away from the **Stamina® Seated Upper Body Exercise Bike.** Do not allow children to use or play on the **Stamina® Seated Upper Body Exercise Bike.** Keep children and pets away from the **Stamina® Seated Upper Body Exercise Bike** when it is in use.
6. The **Stamina® Seated Upper Body Exercise Bike** is not a freewheeling exercise bike; therefore, pedal speed should be reduced in a controlled manner to prevent injury from spinning pedals.
7. It is recommended that you place this exercise equipment on an equipment mat.
8. Set up and operate the **Stamina® Seated Upper Body Exercise Bike** on a solid level surface. Do not position the **Stamina® Seated Upper Body Exercise Bike** on loose rugs or uneven surfaces.
9. Make sure that adequate space is available for access to and around the **Stamina® Seated Upper Body Exercise Bike.**
10. Keep fingers clear of all pinch points when folding and unfolding the **Stamina® Seated Upper Body Exercise Bike.**
11. Before using, inspect the **Stamina® Seated Upper Body Exercise Bike** for worn or loose components, and securely tighten or replace any worn or loose components prior to use.
12. Do not attempt to adjust the seat while you are on the **Stamina® Seated Upper Body Exercise Bike.**
13. Make sure the Seat Post(5) is locked properly by the Adjustment Knobs(15).
14. Consult a physician prior to commencing an exercise program and follow his/her recommendations in developing your fitness program. If at any time during exercise you feel faint, dizzy, or experience pain, stop and consult your physician.
15. Always choose the workout which best fits your physical strength and flexibility level. Know your limits and train within them. Always use common sense when exercising.
16. Do not wear loose or dangling clothing while using the **Stamina® Seated Upper Body Exercise Bike.**
17. Never exercise in bare feet or socks; always wear proper footwear such as running, walking, or cross training shoes that fit well, provide foot support, and feature non-skid rubber soles.
18. Be careful to maintain your balance while using, mounting, dismounting, or assembling the **Stamina® Seated Upper Body Exercise Bike,** loss of balance may result in a fall and serious bodily injury.
19. The **Stamina® Seated Upper Body Exercise Bike** should not be used by persons weighing over 250 pounds.
20. The **Stamina® Seated Upper Body Exercise Bike** should be used by only one person at a time.
21. The **Stamina® Seated Upper Body Exercise Bike** is for consumer use only. It is not for use in public or semipublic facilities.

EXTEND YOUR PARTS WARRANTY TO 180 DAYS FROM THE DATE OF PURCHASE. REGISTER YOUR PRODUCT.

STAMINA®

NEED HELP? CONTACT US FIRST

1 (800) 375-7520

customer.care@staminaproducts.com

Hi! From all of us here at Stamina Products, thank you for your purchase. We know that you have big fitness goals in mind and we are here to help you along. Call us, email us, or send us a message on Facebook. Be sure to contact us if you have any questions on your new product. We look forward to hearing from you!

With your body in mind,
Stamina Customer Care

To enact your extended warranty and to help us better serve you, please **go online** and register your new product.

register.staminaproducts.com

It is quick and easy to register online, but if you're a little old school or just need a reason to raise that little flag on your mailbox, fill out the info on the last page of this manual and mail it in.

ONLINE
customer.care@staminaproducts.com
www.staminaproducts.com

TELEPHONE
1 (800) 375-7520

FAX
(417) 889-8064

MAIL
Stamina Products, Inc.
ATTN: Customer Care
2040 N Alliance Ave
Springfield, MO 65803

facebook.com/StaminaProducts
facebook.com/AeroPilates

CUSTOMER CARE HOURS:
Monday-Thursday, 7:30 AM-5:00 PM, Central Time
Friday, 8:00 AM-3:00 PM, Central Time

BEFORE YOU BEGIN

Thank you for choosing the **Stamina® Seated Upper Body Exercise Bike.** We take great pride in producing this quality product and hope it will provide many hours of quality exercise to make you feel better, look better, and enjoy life to its fullest.

It's a proven fact that a regular exercise program can improve your physical and mental health. Too often, our busy lifestyles limit our time and opportunity to exercise. The **Stamina® Seated Upper Body Exercise Bike** provides a convenient and simple method to begin your journey of getting your body in shape and achieving a happier and healthier lifestyle.

Before reading further, please review the drawing below and familiarize yourself with the parts that are labeled. Locate the serial decal on the product and write the serial number on the cover of the manual in the space provided. See page 5 for an image of the serial decal. Model number and serial number are required when calling for assistance.

Read this manual carefully before using the **Stamina® Seated Upper Body Exercise Bike.**

Although Stamina constructs its products with the finest materials and uses the highest standards of manufacturing and quality control, there can sometimes be missing parts or incorrectly sized parts. If you have any questions or problems with the parts included with your **Stamina® Seated Upper Body Exercise Bike,** please do not return the product. Contact us FIRST!

If a part is missing or defective, please contact Customer Care for assistance. Call us toll free at 1-800-375-7520 (in the U.S.) or live chat on staminaproducts.com. Our Customer Care Staff is available to assist you from 7:30 A.M. to 5:00 P.M. (Central Time) Monday through Thursday and 8:00 A.M. to 3:00 P.M. (Central Time) on Friday.

Be sure to have the name and model number of the product available when you contact us.

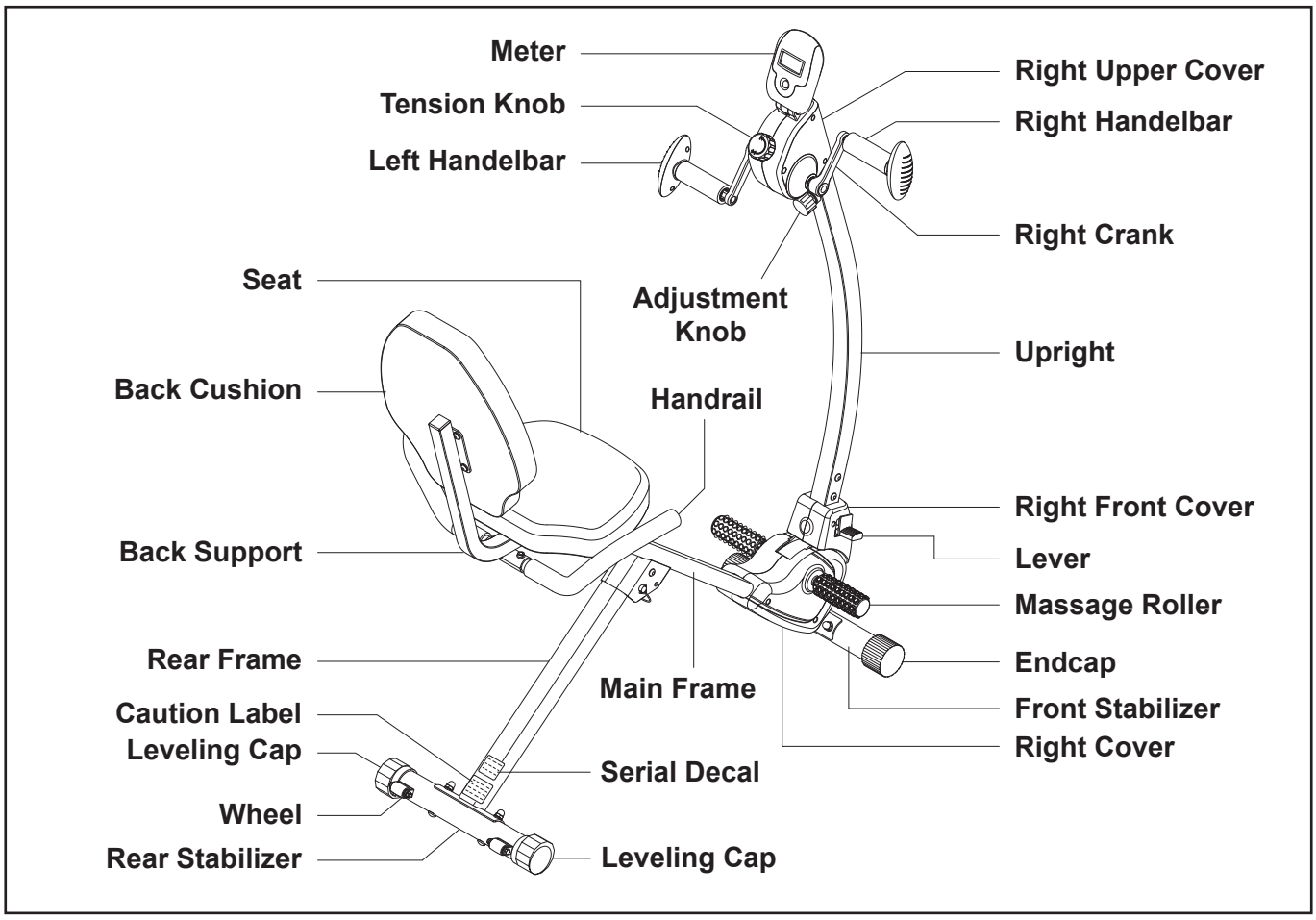

THE FOLLOWING TOOLS ARE INCLUDED FOR ASSEMBLY :

Allen Wrench (5mm)

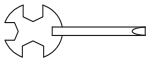

Combination Wrench

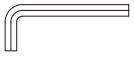

Allen Wrench (8mm)

EQUIPMENT WARNING, CAUTION & NOTICE LABELS

This chart is provided to help identify the warning, caution, and notice labels on the **Stamina® Seated Upper Body Exercise Bike.** Please take a moment to familiarize yourself with all of the warning, caution, and notice labels.

CAUTION LABEL(82)

SERIAL DECAL(83)

To best serve you, our Customer Care Representatives will need your serial number. For quick access, write in your serial number on the cover of the manual.

HARDWARE IDENTIFICATION CHART

This chart is provided to help identify the hardware used in the assembly process. Place the washers or the ends of the bolts or screws on the circles to check for the correct diameter. Use the small scale to check the length of the bolts and screws.

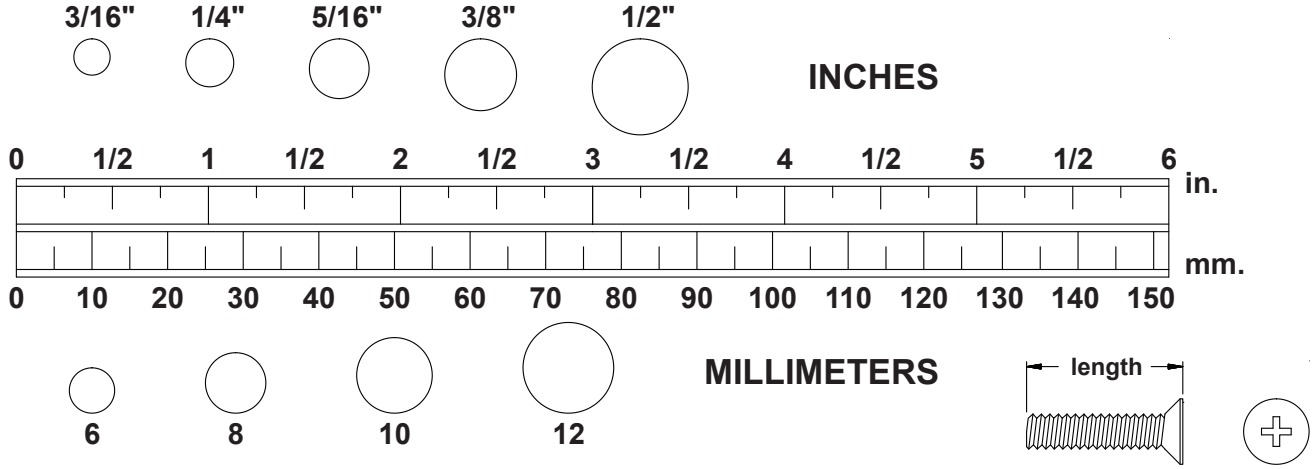

NOTICE: The length of all bolts and screws, except those with flat heads, is measured from below the head to the end of the bolt or screw. Flat head bolts and screws are measured from the top of the head to the end of the bolt or screw.

After unpacking the unit, open the hardware bag and make sure that you have all the following items. Some hardware may be already attached to the part.

	Part Number and Description		Qty
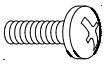	58	Screw, Round Head (M6 x 1 x 12mm)	1
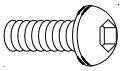	65	Bolt, Button Head (M8 x 1.25 x 20mm)	12
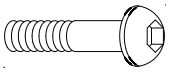	66	Bolt, Button Head (M8 x 1.25 x 40mm)	2
	77	Bolt, Button Head (M8 x 1.25 x 80mm)	2
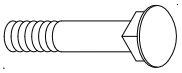	79	Carriage Bolt (M8 x 1.25 x 65mm)	4
	63	Lock Washer (M8)	5
	69	Nylock Nut (M8 x 1.25)	2
	76	Washer (M8)	12
	78	Arc Washer (M8)	8
	80	Acorn Nut (M8 x 1.25)	4
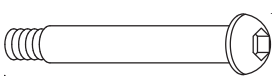	81	Shoulder Bolt	2

ASSEMBLY INSTRUCTIONS

Place all parts from the box in a cleared area and position them on the floor in front of you. Remove all packing materials from your area and place them back into the box. Do not dispose of the packing materials until assembly is completed. Read each step carefully before beginning. If you are missing a part, please go to staminaproducts.com under the Customer Care section and order the part needed, e-mail us at customer.care@staminaproducts.com, or call us toll free at 1-800-375-7520 (in the U.S.). Our Customer Care Staff is available to assist you from 7:30 A.M. to 5:00 P.M. (Central Time) Monday through Thursday and 8:00 A.M. to 3:00 P.M. (Central Time) on Friday.

Some product parts are fit tested at the factory to ensure proper fit and alignment. Marks in the paint may be noticeable, but are not an indication of damage.

STEP 1

Refer to illustration below. Unfold the **REAR FRAME(2)** away from the **MAIN FRAME(1).** Lock the frame assembly in unfolded position by inserting the **SECURE PIN(71)** into the upper hole in the **MAIN FRAME(1).**

STEP 2

Attach the **REAR STABILIZER(11),** the one with **WHEELS(39),** to the **REAR FRAME(2)** with the wheels facing backward. Secure with **CARRIAGE BOLTS(M8x1.25x65mm)(79), ACORN NUTS(M8x1.25)(80),** and **ARC WASHERS(M8)(78).**

STEP 3

Attach the **FRONT STABILIZER(4)** to the **MAIN FRAME(1)** with **CARRIAGE BOLTS(M8x1.25x65mm) (79), ACORN NUTS(M8x1.25)(80),** and **ARC WASHERS(M8)(78).**

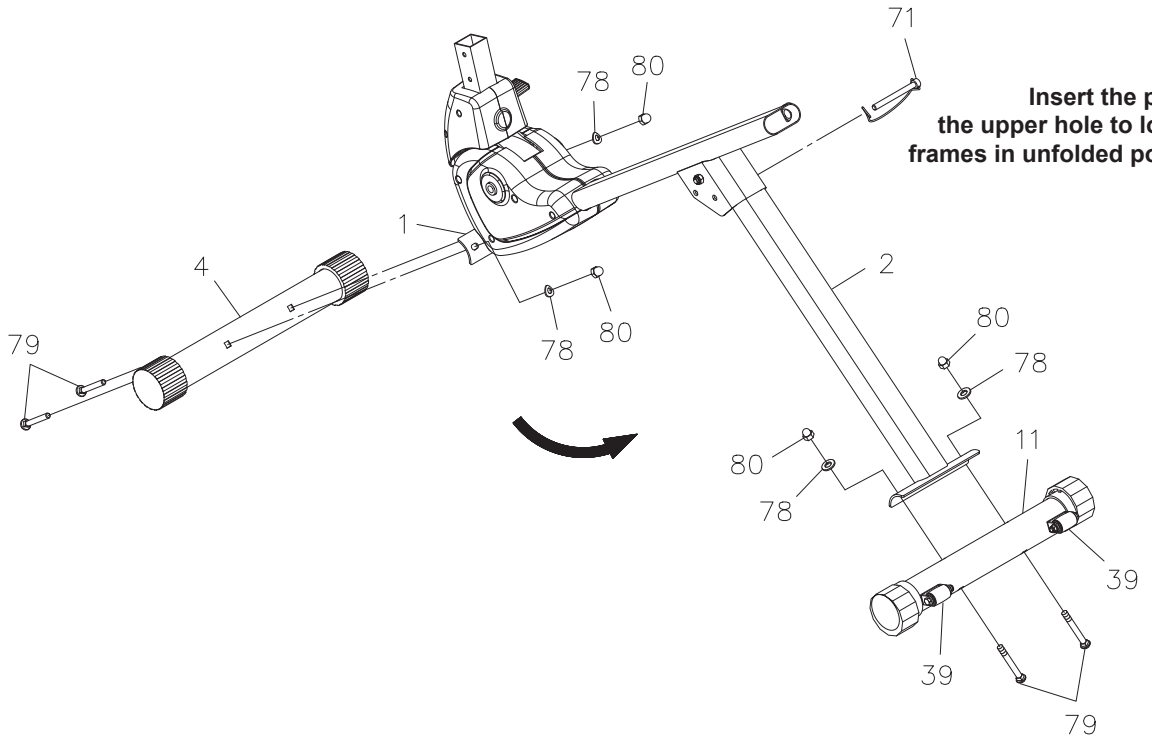

Insert the pin into the upper hole to lock the frames in unfolded position.

ASSEMBLY INSTRUCTIONS

STEP 4

Attach the **SEAT(43)** to the **SEAT POST(5)** with **BUTTON HEAD BOLTS(M8x1.25x20mm)(65)** and **WASHERS(M8)(76).** Insert the **SEAT POST(5)** into the **MAIN FRAME(1)** and secure with the **ADJUSTMENT KNOB(15).**

NOTE: Make sure that the pin on the **ADJUSTMENT KNOB(15)** is inserted into one of the holes in the **SEAT POST(5).** The **ADJUSTMENT KNOB(15)** should be screwed in tight to make the **SEAT POST(5)** fit securely in the **MAIN FRAME(1).**

STEP 5

Attach the **BACK SUPPORT(7)** to the **SEAT POST(5)** with **BUTTON HEAD BOLTS(M8x1.25x80mm)(77), ARC WASHERS(M8)(78),** and **NYLOCK NUTS(M8x1.25)(69).**

STEP 6

Attach the **BACK CUSHION(42)** to the **BACK SUPPORT(7)** with **BUTTON HEAD BOLTS(M8x1.25x20mm) (65)** and **WASHERS(M8)(76).**

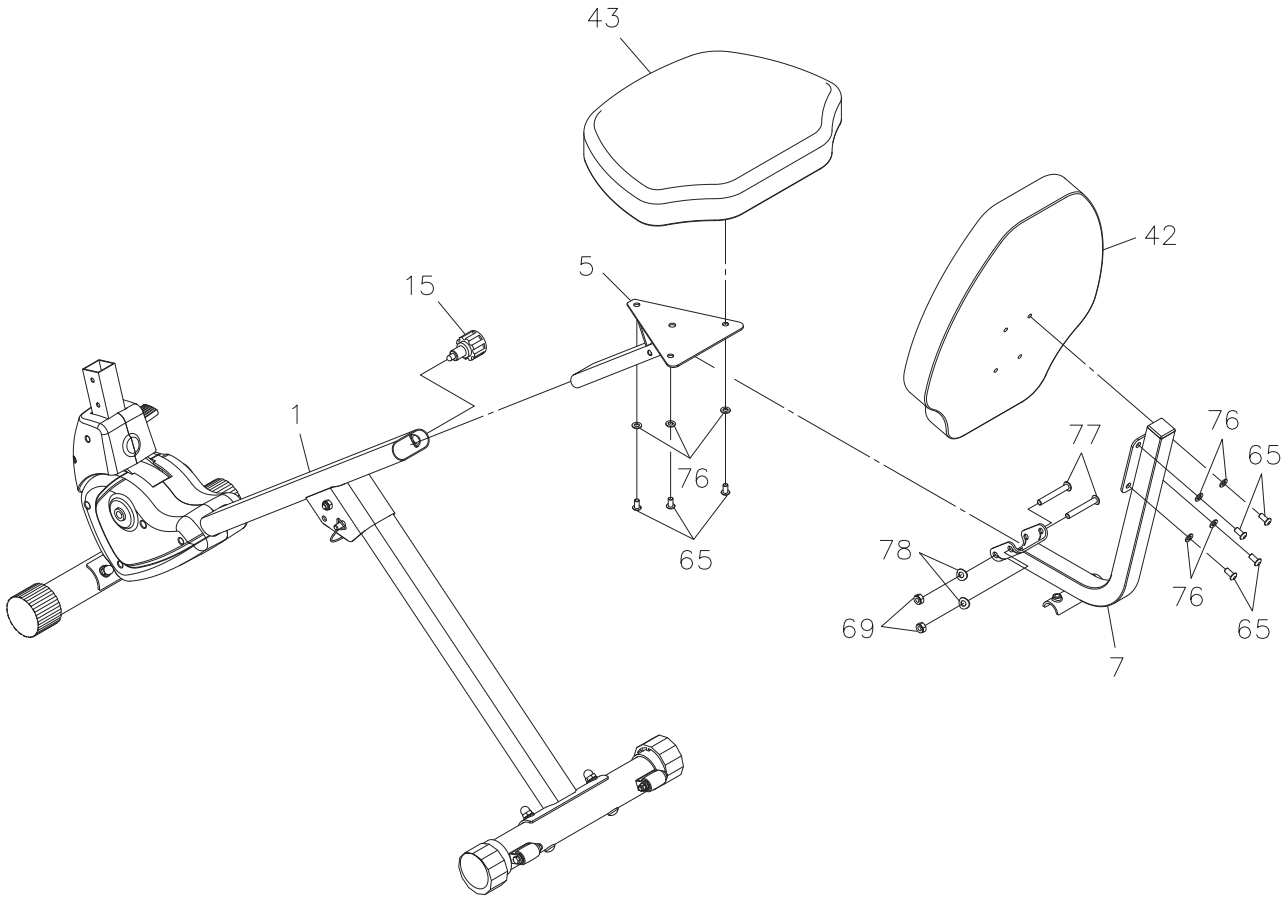

ASSEMBLY INSTRUCTIONS

STEP 7
Attach the **HANDRAIL(6)** to the **BACK SUPPORT(7)** with **BUTTON HEAD BOLTS(M8x1.25x40mm)(66)** and **ARC WASHERS(M8)(78).**

STEP 8
Lift the **LEVER(10)** up, adjust the **LOWER UPRIGHT(9)** to the most forward position. Then press the **LEVER(10)** down to lock the **LOWER UPRIGHT(9)** in position. Insert the **UPRIGHT(8)** onto the **LOWER UPRIGHT(9)** and secure with **BUTTON HEAD BOLTS(M8x1.25x20mm)(65), LOCK WASHERS(M8)(63),** and **WASHERS(M8)(76).**

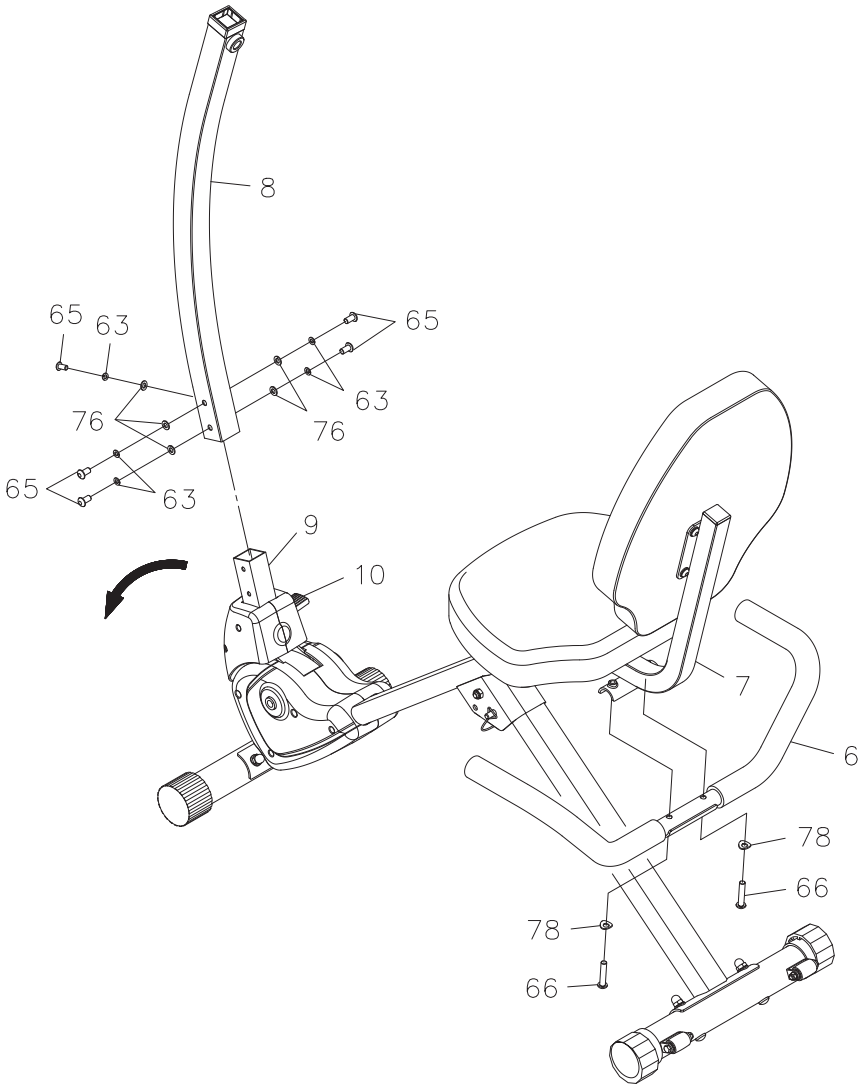

ASSEMBLY INSTRUCTIONS

STEP 9

Attach the **MASSAGE ROLLERS(40)** to both sides of the **MAIN FRAME(1)** with the **SHOULDER BOLTS(81).** Press the **MASSAGE ROLLER CAPS(41)** into the **MASSAGE ROLLERS(40).**

STEP 10

Install Handlebar Assembly by inserting the **HANDLEBAR POST(3)** into the **UPRIGHT(8)** and secure with the **ADJUSTMENT KNOB(15).** Bolt the **ROUND HEAD BOLT(M6x1x12mm)(58)** into the **UPRIGHT(8)** for security.

NOTE: Make sure that the pin on the **ADJUSTMENT KNOB(15)** is inserted into one of the holes in the **HANDLEBAR POST(3).** The **ADJUSTMENT KNOB(15)** should be screwed in tight to make the **HANDLEBAR POST(3)** fit securely in the **UPRIGHT(8).**

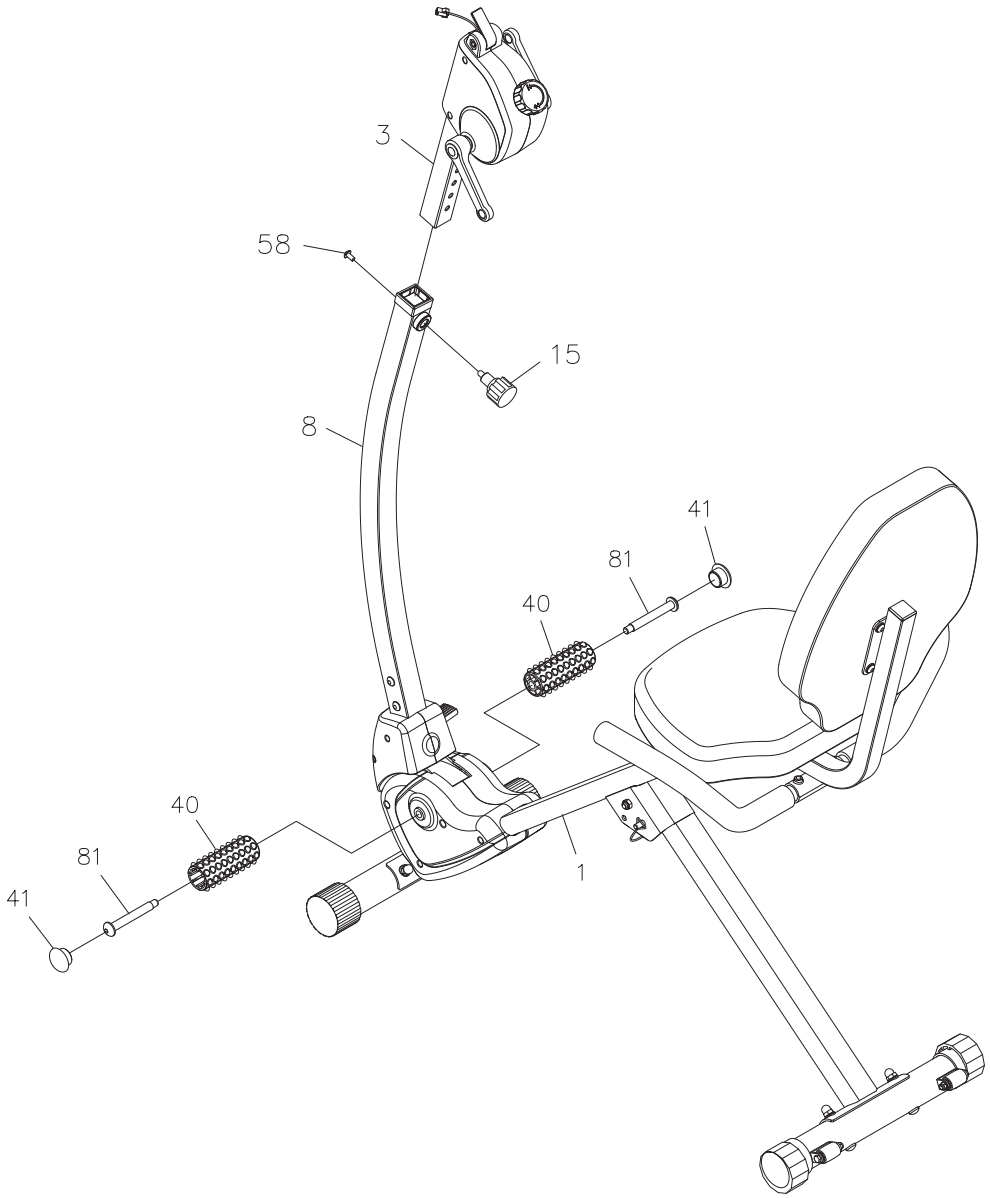

ASSEMBLY INSTRUCTIONS

STEP 10

NOTE: The **RIGHT HANDLEBAR SHAFT(22)** has an **R** stamped on the end of the handlebar shaft. The **RIGHT HANDLEBAR SHAFT(22)** has right hand threads and is tightened by turning clockwise. The **LEFT HANDLEBAR SHAFT(21)** has an **L** stamped on the end of the pedal shaft. The **LEFT HANDLEBAR SHAFT(21)** has left hand threads and is tightened by turning counterclockwise.

Attach the **HANDLEBAR(48)** to the left side by threading the **LEFT HANDLEBAR SHAFT(21)** to the **LEFT CRANK(18)** and tighten securely. The shoulder of the **HANDLEBAR SHAFTS(21, 22)** should be in contact with the **CRANKS(18, 19)** when securely tightened.
Repeat on the right side in order to attach the other **HANDLEBAR(48)** to the **RIGHT CRANK(19).**

STEP 11

Install two AAA batteries into the **METER(13),** the batteries are not included. See page 13 for detailed battery installation instructions. Insert the **METER(13)** onto the **METER PLATE(50).** Connect the **SENSOR WIRE(14)** to the connecting wire of the **METER(13).**

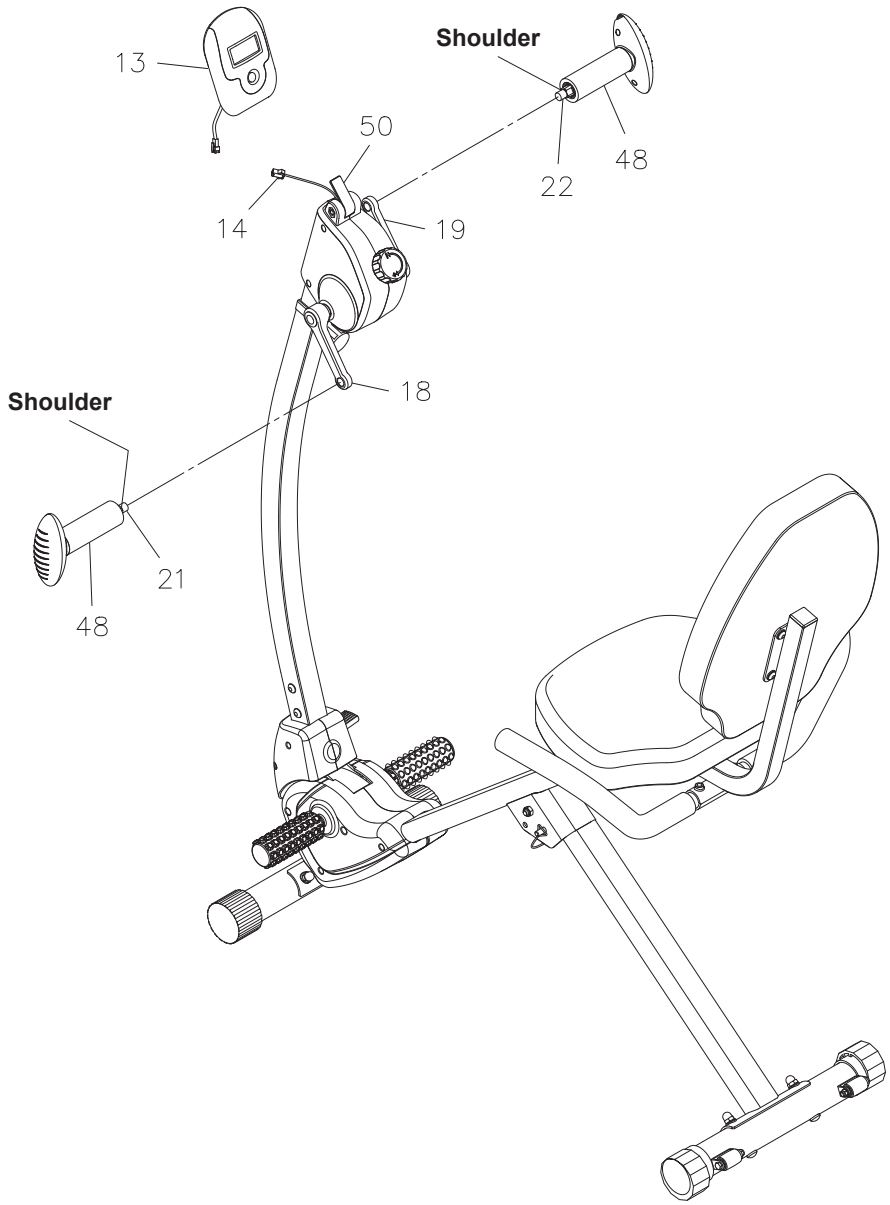

SET UP INSTRUCTIONS

Place the **Stamina® Seated Upper Body Exercise Bike** in the area where it will be used. It is recommended that the **Stamina® Seated Upper Body Exercise Bike** be placed on an equipment mat. The maximum operation dimensions of the **Stamina® Seated Upper Body Exercise Bike** are approximately 44.4 inches long x 23.3 inches wide x 54 inches tall. (These dimensions may vary up to one inch.) An area 4 feet wide x 6 feet long is required for safe operation of the **Stamina® Seated Upper Body Exercise Bike.** Make sure that adequate space is available for access to and passage around the **Stamina® Seated Upper Body Exercise Bike.**

LEVELING: Adjust the **LEVELING CAPS(38)** on the **REAR STABILIZER(11)** so that the **Stamina® Seated Upper Body Exercise Bike** sits on the floor without rocking.

MOVING: The **Stamina® Seated Upper Body Exercise Bike** has a pair of **WHEELS(39)** on the **REAR STABILIZER(11).** Hold the **HANDRAIL(6)** and tilt back on **WHEELS(39)** to move the **Stamina® Seated Upper Body Exercise Bike.**

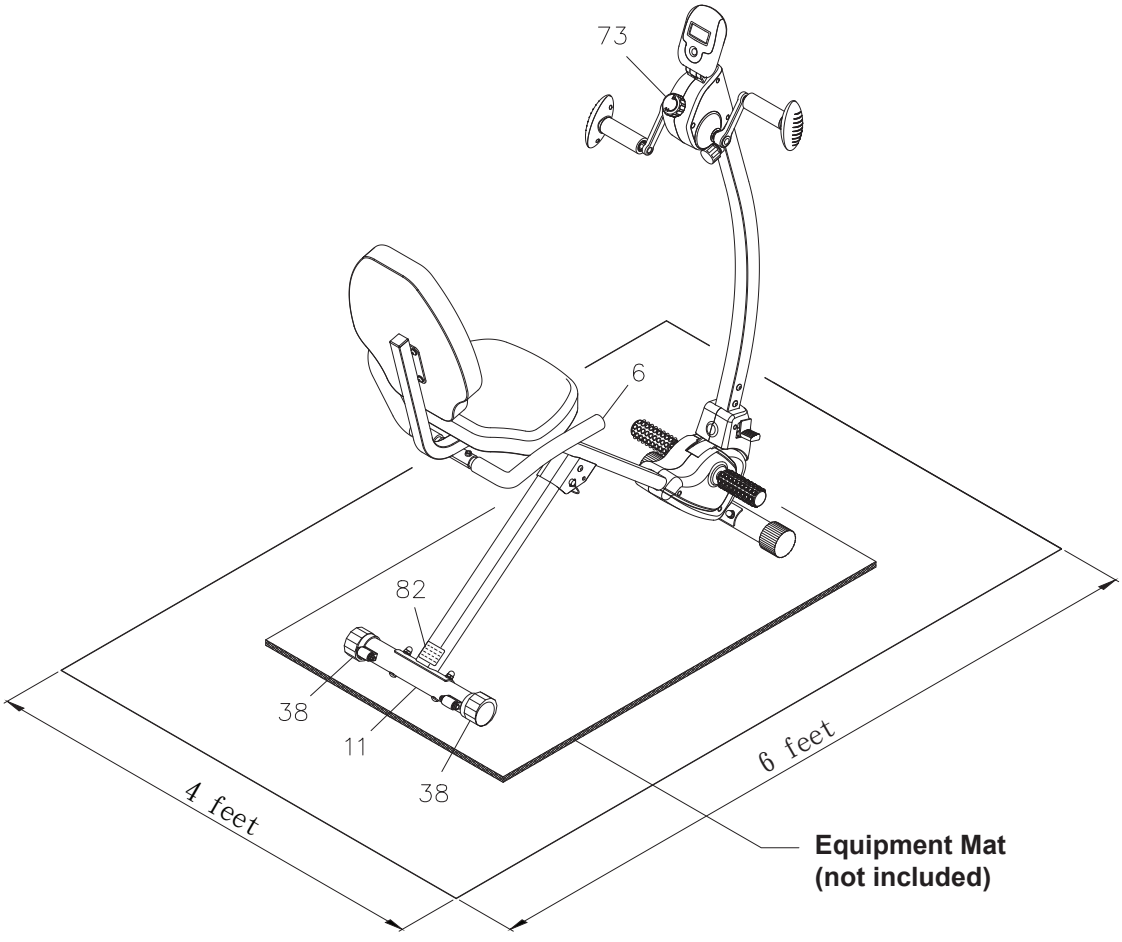

FUNCTION INSPECTION:

Visually inspect the **Stamina® Seated Upper Body Exercise Bike** to verify that assembly is as shown in the above illustration. Check the function of the **Stamina® Seated Upper Body Exercise Bike** by turning the handlebars slowly through one complete revolution to verify that the drive train functions properly. Adjust the **TENSION KNOB(73)** and verify that it functions properly and the resistance changes.

CAUTION: Locate and read the **CAUTION LABEL(82)** on the **Stamina® Seated Upper Body Exercise Bike.** Make sure that all users read the **CAUTION LABEL(82)** before using the product.

OPERATIONAL INSTRUCTIONS

USING THE FITNESS METER

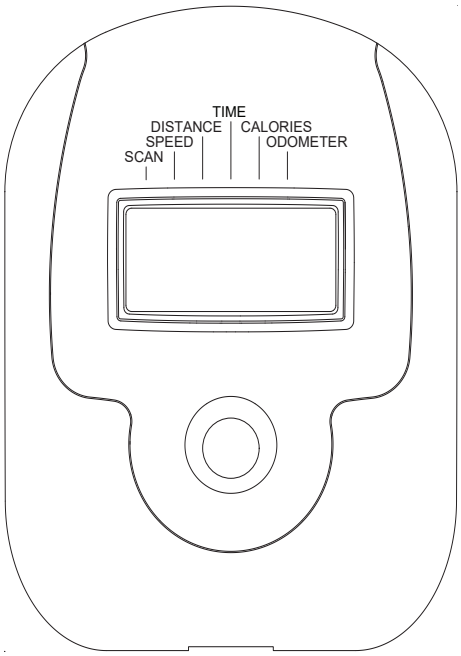

POWER ON : Move the **Handlebars(48)** or press the button.

POWER OFF : Automatically shuts off after four minutes of inactivity.

FUNCTION BUTTON:

Press to select the function value displays of **TIME, SPEED, DISTANCE, CALORIES,** and **ODOMETER.**
Press and hold for two seconds to reset all functions to zero, except **ODOMETER.**

FUNCTIONS:

SCAN: Automatically scans **TIME, SPEED, DISTANCE, CALORIES,** and **ODOMETER** in sequence with a change every six seconds. Press and release the button until the arrow appears on the display and points to the **SCAN.**

TIME: Displays the time from 1 sec. up to 99:59 minutes.

SPEED: Displays the current speed from zero to 999.9 Mile/Hr.

DISTANCE: Displays the distance from zero to 99.99 miles.

CALORIES: Displays the calories burned from zero to 999.9 Kcal.
The calorie readout is an estimate for an average user. It should be used only as a comparison between workouts on this unit.

ODOMETER: Displays the total accumulated distance you have traveled from zero to 999.9 miles.
The total accumulated distance is retained when the meter is turned off, until the battery is removed.

NOTE: The meter will shut off automatically after four minutes of inactivity. All function values will be kept. You can continue to workout with these function values, or press the button and hold it down for two seconds to reset all functions to zero.

HOW TO INSTALL AND REPLACE BATTERIES:

1. Open the Battery Door on the back of the meter.
2. The meter operates with two AAA batteries (1.5V each), the batteries are not included. Refer to the illustration to install or replace the batteries.

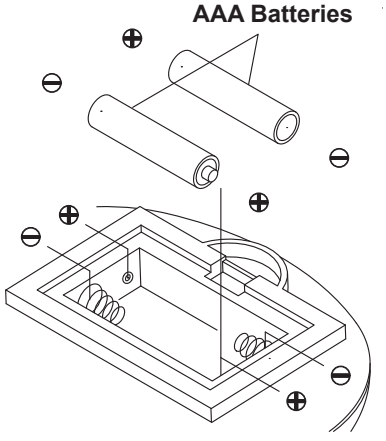

NOTE:
1. Do not mix a new battery with an old battery.
2. Use the same type of battery. Do not mix an alkaline battery with another type of battery.
3. Rechargeable batteries are not recommended.
4. **Ultimate disposal of battery should be handled according to all state and federal laws and regulations.**
5. **Do not dispose of batteries in fire.**

OPERATIONAL INSTRUCTIONS

SEAT ADJUSTMENT

Proper seat adjustment is necessary for the massage function.

1. Turn the **ADJUSTMENT KNOB(15)** counterclockwise to loosen, but do not remove, then pull the **ADJUSTMENT KNOB(15)** to release the pin. Slide the **SEAT POST(5)** until the **SEAT(43)** is at the proper height. Release the **ADJUSTMENT KNOB(15)** making sure the pin catches in one of the holes of the **SEAT POST(5)** and tighten the **ADJUSTMENT KNOB(15).**

2. Sit on the seat and place your feet on the **MASSAGE ROLLERS(40).** You should be able to move front and back and feel comfortable on the **MASSAGE ROLLERS(40).** Refer to the illustration.

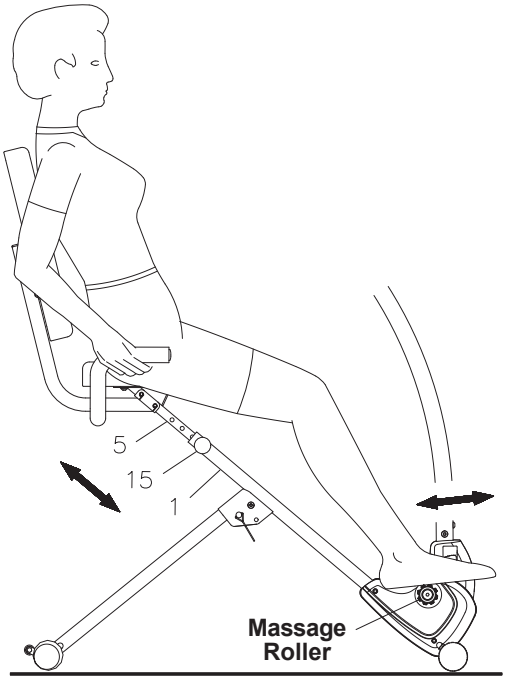

CAUTION: 1. Do not attempt to adjust the seat while you are on the **Stamina® Seated Upper Body Exercise Bike.**
2. Always tighten the **ADJUSTMENT KNOB(15)** after adjusting the seat to a new position.

HANDLEBAR ANGLE ADJUSTMENT

Refer to the illustrations below. The angle of the **HANDLEBARS(48)** can be set to different angles from **Position 1** to **Position 5.** Lift the **LEVER(10)** up using your right foot, adjust the **UPRIGHT(8)/ HANDLEBARS(48)** to desired position. Then press the **LEVER(10)** down to lock the **UPRIGHT(8)/ HANDLEBARS(48)** in position.

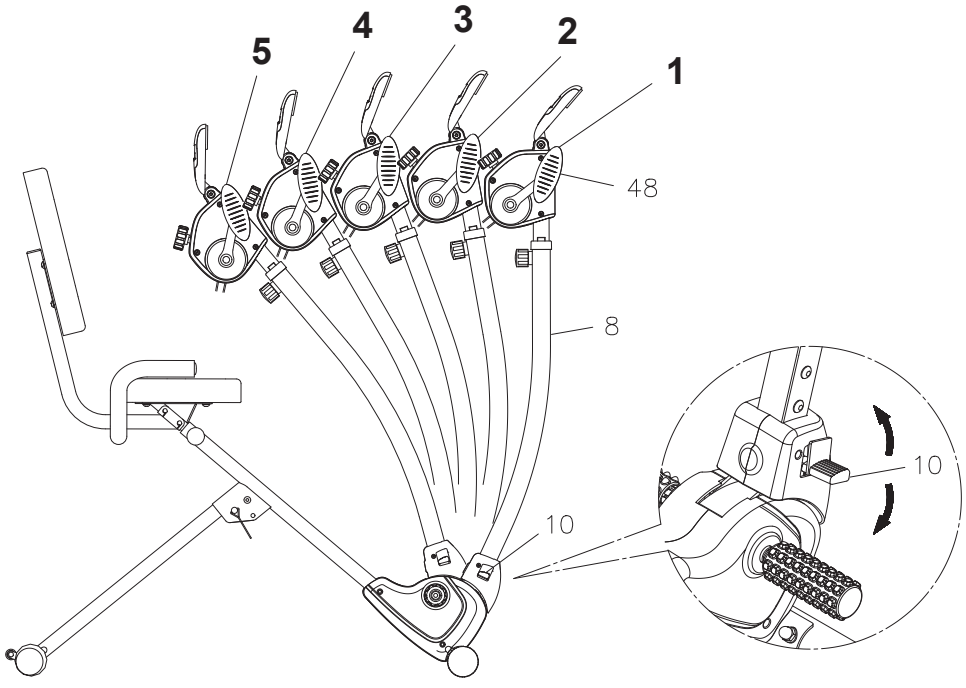

OPERATIONAL INSTRUCTIONS

HANDLEBAR LOAD ADJUSTMENT

To increase the load, turn the **TENSION KNOB(73)** clockwise.
To decrease the load, turn the **TENSION KNOB(73)** counterclockwise.

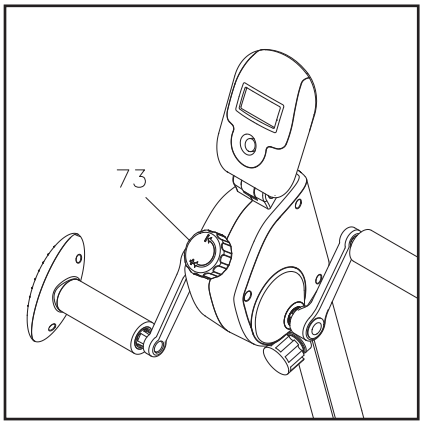

STORAGE

1. To store the **Stamina® Seated Upper Body Exercise Bike,** simply keep it in a clean dry place.
2. To avoid damage to the electronics, remove the batteries before storing the **Stamina® Seated Upper Body Exercise Bike** for one year or more.
3. To move the **Stamina® Seated Upper Body Exercise Bike,** hold the **HANDRAIL(6)** and tilt the **Stamina® Seated Upper Body Exercise Bike** onto the **WHEELS(39)** of the **REAR STABILIZER(11).**
4. The minimum dimensions of the **Stamina® Seated Upper Body Exercise Bike** are approximately 41.2 inches long x 23.3 inches wide x 42.4 inches tall. Please measure your **Stamina® Seated Upper Body Exercise Bike** if exact dimensions are needed.

MAINTENANCE

The safety and integrity designed into the **Stamina® Seated Upper Body Exercise Bike** can only be maintained when the **Stamina® Seated Upper Body Exercise Bike** is regularly examined for damage and wear. Special attention should be given to the following:

1. Adjust the **TENSION KNOB(73)** to verify that it functions properly and the resistance changes.
2. Use a wrench to verify that the handlebars are tightened securely. If tightening is required, remember that the left handlebar shaft has left hand threads and is tightened by turning counterclockwise.
3. Verify that all nuts and bolts are present and properly tightened. Replace missing nuts and bolts. Tighten loose nuts and bolts.
4. Verify that the **CAUTION LABEL(82)** is in place and easy to read. Call Stamina Products immediately at **1-800-375-7520** for a replacement **CAUTION LABEL(82)** if it is missing or damaged.
5. It is the sole responsibility of the user/owner to ensure that regular maintenance is performed.
6. Worn or damaged components must be replaced immediately or the **Stamina® Seated Upper Body Exercise Bike** removed from service until repair is made.
7. Only Stamina Products supplied components should be used to maintain/repair the **Stamina® Seated Upper Body Exercise Bike.**
8. Keep your **Stamina® Seated Upper Body Exercise Bike** clean by wiping it off with an absorbent cloth after use.

CONDITIONING GUIDELINES

How you begin your exercise program depends on your physical condition. If you have been inactive for several years or are severely overweight, start slowly and increase your workout time gradually. Increase your workout intensity gradually by monitoring your heart rate while you exercise.

Remember to follow these essentials:

- Have your doctor review your training and diet programs.
- Begin your training program slowly with realistic goals that have been set by you and your physician.
- Warm up before you exercise and cool down after you work out.
- Take your pulse periodically during your workout and strive to stay within a range of 60% (lower intensity) to 90% (higher intensity) of your maximum heart rate zone. Start at the lower intensity, and build up to higher intensity as you become more aerobically fit.
- If you feel dizzy or lightheaded you should slow down or stop exercising.

Initially you may only be able to exercise within your target zone for a few minutes; however, your aerobic capacity will improve over the next six to eight weeks. It is important to pace yourself while you exercise so you don't tire too quickly.

To determine if you are working out at the correct intensity, use a heart rate monitor or use the table below. For effective aerobic exercise, your heart rate should be maintained at a level between 60% and 90% of your maximum heart rate. If just starting an exercise program, work out at the low end of your target heart rate zone. As your aerobic capacity improves, gradually increase the intensity of your workout by increasing your heart rate.

Measure your heart rate periodically during your workout by stopping the exercise but continuing to move your legs or walk around. Place two or three fingers on your wrist and take a six second heartbeat count. Multiply the results by ten to find your heart rate. For example, if your six second heartbeat count is 14, your heart rate is 140 beats per minute. A six second count is used because your heart rate will drop rapidly when you stop exercising. Adjust the intensity of your exercise until your heart rate is at the proper level.

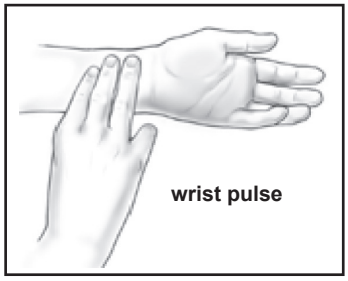

Target Heart Rate Zone Estimated by Age*

Age	Target Heart Rate Zone (55%-90% of Maximum Heart Rate)	Average Maximum Heart Rate 100%
20 years	110-180 beats per minute	200 beats per minute
25 years	107-175 beats per minute	195 beats per minute
30 years	105-171 beats per minute	190 beats per minute
35 years	102-166 beats per minute	185 beats per minute
40 years	99-162 beats per minute	180 beats per minute
45 years	97-157 beats per minute	175 beats per minute
50 years	94-153 beats per minute	170 beats per minute
55 years	91-148 beats per minute	165 beats per minute
60 years	88-144 beats per minute	160 beats per minute
65 years	85-139 beats per minute	155 beats per minute
70 years	83-135 beats per minute	150 beats per minute

* For cardiorespiratory training benefits, the American College of Sports Medicine recommends working out within a heart rate range of 55% to 90% of maximum heart rate. To predict the maximum heart rate, the following formula was used: 220 - Age = predicted maximum heart rate

WARM-UP and COOL-DOWN

Warm-Up The purpose of warming up is to prepare your body for exercise and to minimize injuries. Warm up for two to five minutes before strength training or aerobic exercising. Perform activities that raise your heart rate and warm the working muscles. Activities may include brisk walking, jogging, jumping jacks, jump rope, and running in place.

Stretching Stretching while your muscles are warm after a proper warm-up and again after your strength or aerobic training session is very important. Muscles stretch more easily at these times because of their elevated temperature, which greatly reduces the risk of injury. Stretches should be held for 15 to 30 seconds. Do not bounce.

Suggested Stretching Exercises

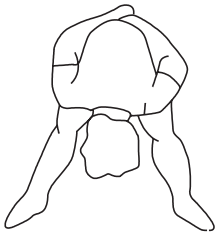

Lower Body Stretch
Place feet shoulder-width apart and lean forward. Keep this position for 30 seconds using the body as a natural weight to stretch the backs of the legs.
DO NOT BOUNCE!
When the pull on the back of the legs lessens, gradually try a lower position.

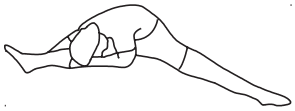

Floor Stretch
While sitting on the floor, open the legs as wide as possible. Stretch the upper body toward the knee on the right leg by using your arms to pull your chest to your thighs. Hold this stretch 10 to 30 seconds.
DO NOT BOUNCE!
Do this stretch 10 times. Repeat the stretch with the left leg.

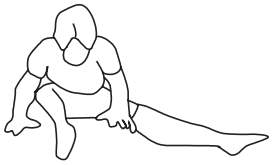

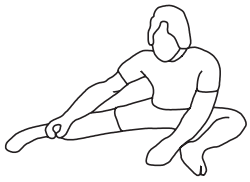

Bent Torso Pulls
While sitting on the floor, have legs apart, one leg straight and one knee bent. Pull the chest down to touch the thigh on the leg that is bent, and twist at the waist. Hold this position at least 10 seconds. Repeat 10 times on each side.

Bent Over Leg Stretch
Stand with feet shoulder-width apart and lean forward as illustrated. Using the arms, **gently** pull the upper body towards the right leg. Let the head hang down.
DO NOT BOUNCE!
Hold the position a minimum of 10 seconds. Repeat pulling the upper body to the left leg. Do this stretch several times slowly.

Remember to always check with your physician before starting any exercise program.

Cool-Down The purpose of cooling down is to return the body to its normal, or near normal, resting state at the end of each exercise session. A proper cool-down slowly lowers your heart rate and allows blood to return to the heart. Your cool-down should include the stretches listed above and should be completed after each strength training session.

PRODUCT PARTS DRAWING

FRONT

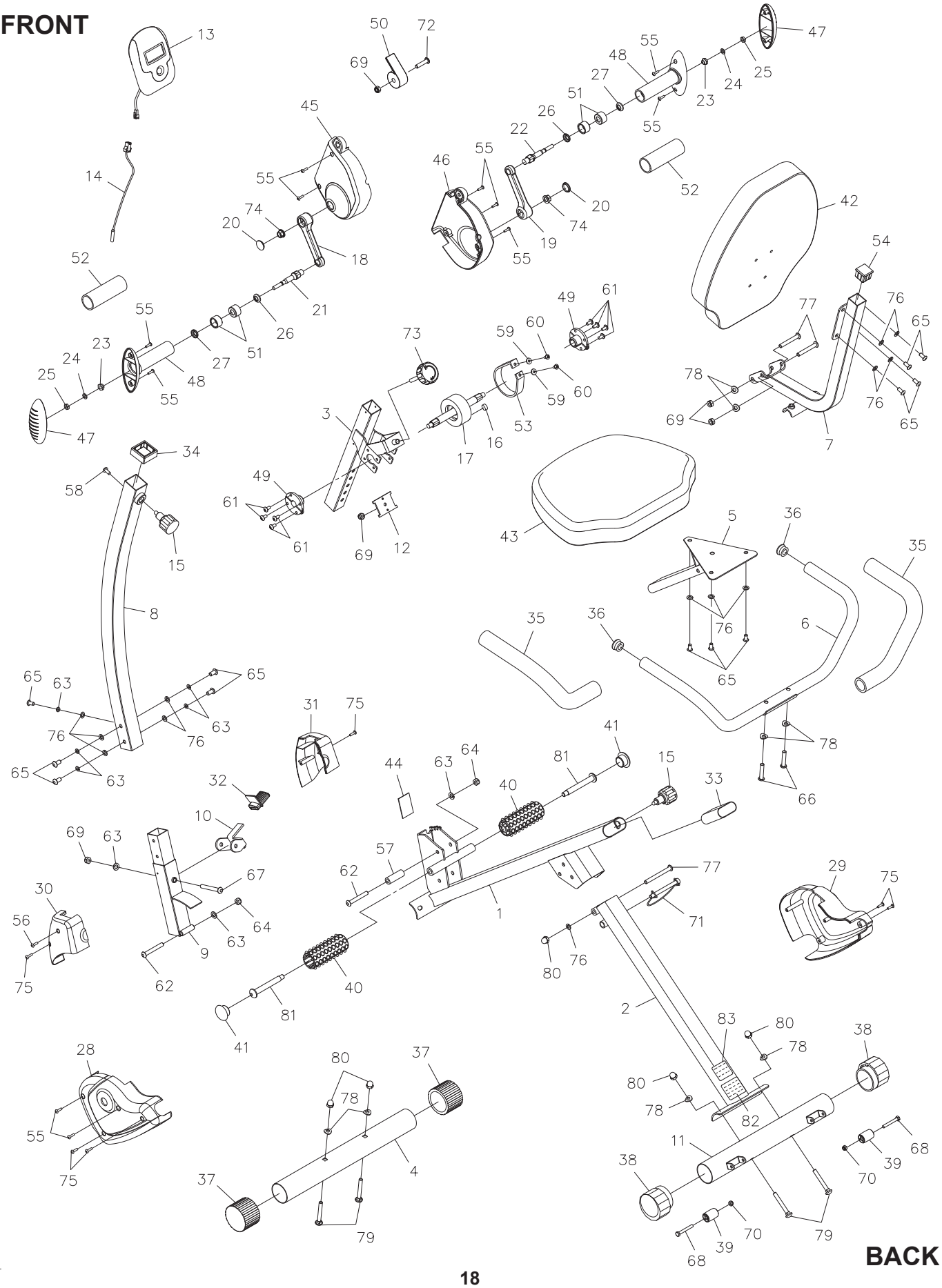

BACK

PARTS LIST

PART#	PART NAME	QTY
1	Main Frame	1
2	Rear Frame	1
3	Handlebar Post	1
4	Front Stabilizer	1
5	Seat Post	1
6	Handrail	1
7	Back Support	1
8	Upright	1
9	Lower Upright	1
10	Lever	1
11	Rear Stabilizer	1
12	Pulling Plate	1
13	Meter	1
14	Sensor Wire	1
15	Adjustment Knob	2
16	Small Magnet	1
17	Brake Drum	1
18	Left Crank	1
19	Right Crank	1
20	Crank Cap	2
21	Left Handlebar Shaft	1
22	Right Handlebar Shaft	1
23	Arc Nut (M8 x 1.25)	2
24	Snap Washer	2
25	Nut (M8 x 1.25)	2
26	Ball Bearing w/ big hole	2
27	Ball Bearing w/ small hole	2
28	Left Cover	1
29	Right Cover	1
30	Left Front Cover	1
31	Right Front Cover	1
32	Lever Cover	1
33	Bushing	1
34	Hollow Cap	1
35	Foam Grip	2
36	Round Plug (ø25mm)	2
37	Endcap	2
38	Leveling Cap	2
39	Wheel	2
40	Massage Roller	2
41	Massage Roller Cap	2
42	Back Cushion	1
43	Seat	1
44	Protection Pad	1
45	Left Upper Cover	1
46	Right Upper Cover	1
47	Handlebar Cover	2

PARTS LIST

PART#	PART NAME	QTY
48	Handlebar	2
49	Shaft Block	2
50	Meter Plate	1
51	Bearing Housing	4
52	Hand Grip	2
53	Brake Strap	1
54	Square Plug (30mm x 30mm)	1
55	Screw, Round Head (ST4.2 x 16mm)	11
56	Screw, Round Head (ST4.2 x 25mm)	1
57	Sleeve	1
58	Bolt, Round Head (M6 x 1 x 12mm)	1
59	Washer (M5)	2
60	Screw, Round Head (M5 x 0.8 x 8mm)	2
61	Bolt, Round Head (M6 x 1 x 10mm)	8
62	Bolt, Hex Head (M8 x 1.25 x 55mm)	2
63	Lock Washer (M8)	8
64	Thin Nut (M8 x 1.25 x 6mm thick)	2
65	Bolt, Button Head (M8 x 1.25 x 20mm)	12
66	Bolt, Button Head (M8 x 1.25 x 40mm)	2
67	Bolt, Button Head (M8 x 1.25 x 68mm)	1
68	Bolt, Hex Head (M6 x 1 x 45mm)	2
69	Nylock Nut (M8 x 1.25)	5
70	Nylock Nut (M6 x 1)	2
71	Secure Pin	1
72	Bolt, Button Head (M8 x 1.25 x 35mm)	1
73	Tension Knob	1
74	Flange Nut (M10 x 1.25)	2
75	Screw, Round Head Self-Tapping (ST4.2 x 16mm)	6
76	Washer (M8)	13
77	Bolt, Button Head (M8 x 1.25 x 80mm)	3
78	Arc Washer (M8)	8
79	Carriage Bolt (M8 x 1.25 x 65mm)	4
80	Acorn Nut (M8 x 1.25)	5
81	Shoulder Bolt (ø12 x 83mm, M10 x 1.5 x 12mm)	2
82	Caution Label	1
83	Serial Decal	1
84	Allen Wrench (5mm)	1
85	Allen Wrench (8mm)	1
86	Combination Wrench	1
87	Manual	1

LIMITED WARRANTY

MODEL 15-0301

WARRANTY

Stamina Products, Inc. (“Stamina”) warrants to the original purchaser that this product will be free from defects in materials and workmanship that arise under normal use, service, proper assembly and proper operation in accordance with product warnings/instructions for a period of 90 days on the parts and one year on the frame from the date of the original purchase from an authorized retailer. **THIS WARRANTY SHALL NOT APPLY TO ANY PRODUCT WHICH HAS BEEN SUBJECT TO COMMERCIAL USE, ABUSE, MISUSE, ALTERATION OF ANY KIND OR TO ANY DEFECT OR CHANGE CAUSED BY IMPROPER ASSEMBLY, REPAIR, REPLACEMENT, SUBSTITUTION OR USE WITH PARTS NOT PROVIDED BY STAMINA.** Commercial use includes use of product in athletic clubs, health clubs, spas, gyms, and all other public or semipublic facilities whether or not the product’s use is in furtherance of a profit making enterprise, and all other use which is not for personal purposes.

To implement this limited warranty, send a written notice stating your name, date, and place of purchase and a brief description of the defect along with your receipt to Stamina Products, Inc. 2040 N Alliance Ave, Springfield, Missouri, USA, MO 65803, or email us at customer.care@staminaproducts.com, or call us at 1-800-375-7520. If the defect is covered under this limited warranty, you will be requested to return the product or part to us for free repair or replacement at our option.

NO ACTION FOR BREACH OF THIS LIMITED WARRANTY MAY BE COMMENCED MORE THAN ONE (1) YEAR AFTER THE DATE THE ALLEGED BREACH WAS OR SHOULD HAVE BEEN DISCOVERED. NO ACTION FOR BREACH OF ANY IMPLIED WARRANTY (INCLUDING MERCHANTABILITY AND FITNESS FOR A PARTICULAR PURPOSE) MAY BE COMMENCED MORE THAN ONE (1) YEAR AFTER DELIVERY OF THE PRODUCT TO THE PURCHASER. These warranties are not transferable. **IF ANY PART OF THE PRODUCT IS NOT IN COMPLIANCE WITH THIS LIMITED WARRANTY OR ANY IMPLIED WARRANTY, THE REMEDY OF REPAIR OR REPLACEMENT IS THE EXCLUSIVE REMEDY.** If any claim is made under this limited warranty or any implied warranty, Stamina reserves the right to require the product to be returned for inspection, at the purchaser’s expense, to Stamina’s premises in Springfield, Missouri. Return of the enclosed warranty registration card is not required for warranty coverage, but is merely a way of establishing the date and place of purchase.

Stamina **SHALL NOT BE LIABLE FOR THE LOSS OF USE OF ANY PRODUCT, LOSS OF TIME, INCONVENIENCE, COMMERCIAL LOSS OR ANY OTHER INDIRECT, CONSEQUENTIAL, SPECIAL OR INCIDENTAL DAMAGES DUE TO BREACH OF THE ABOVE WARRANTY OR ANY IMPLIED WARRANTY.**

THIS LIMITED WARRANTY IS THE ONLY EXPRESS WARRANTY. NO ORAL OR WRITTEN INFORMATION GIVEN BY STAMINA, ITS AGENTS OR EMPLOYEES, SHALL CREATE A WARRANTY OR IN ANY WAY INCREASE THE SCOPE OF THIS WARRANTY. This warranty gives you specific legal rights, and you may also have other legal rights which vary from state to state. **ANY OTHER RIGHT WHICH YOU MAY HAVE, INCLUDING ANY IMPLIED WARRANTY OF MERCHANTABILITY OR FITNESS FOR A PARTICULAR PURPOSE, IS LIMITED IN DURATION TO THE DURATION OF THIS WARRANTY.**

The laws in some states affect the disclaimer or limitation of implied warranties and consequential and incidental damages. If any such law is found applicable, the foregoing disclaimers and limitations of and on implied warranties and consequential and incidental damages shall be deemed to be modified to the extent necessary to comply with applicable law.

NOTES

TO CONTACT CUSTOMER CARE

For your convenience, Stamina's customer care representatives can be reached by email at **customer.care@staminaproducts.com** or by phone at 1-800-375-7520 (in the U.S.). Our customer care representatives are available Monday through Thursday from 7:30 a.m. until 5:00 p.m., and Friday 8:00 a.m. until 3 p.m. Central Time.

ONLINE
CUSTOMER CARE
customer.care@staminaproducts.com
www.staminaproducts.com

TELEPHONE
CUSTOMER CARE
Tel: 1 (800) 375-7520

FAX
CUSTOMER CARE
Fax: (417) 889-8064

MAIL
STAMINA PRODUCTS, INC.
ATTN: Customer Care
2040 N Alliance Ave, Springfield, MO 65803

Would you like to recieve email information or special offers from Stamina Products? Register at contact.staminaproducts.com

TO REGISTER YOUR PRODUCT

To enact your warranty, please register your product by going to register.staminaproducts.com. Please have your product model number (printed on the cover of this owner's manual) and the serial number (printed on the black and white sticker on your product) ready.

If you don't have internet access, you can call customer care at 1-800-375-7520, or fill out and mail the product registration form below to Stamina Products, Inc.; 2040 N Alliance Ave, Springfield, MO 65803.

PRODUCT REGISTRATION FORM

Stamina Products, Inc.
2040 N Alliance Ave, Springfield, MO 65803

Model Number: ..... Serial Number: .....

Product Name: .....

Place Purchased: .....

Date of Purchase: ..... Purchase Price: .....

First Name: ..... Last Name: .....

City: ..... State: ..... Zip Code: .....

Email Address: ..... Phone #: ( ) .....

Would you like to receive email information or special offers from Stamina Products?* ____Yes ____No *If yes, be sure your email address is included above.

Detach and Mail or Fax the Form Above

TO ORDER PARTS

If there are missing or damaged parts, you can go to parts.staminaproducts.com and order those parts. If you have questions, please contact customer care. Do not return the product. To order parts by mail, fill out the sheet below and fax it to 417-889-8064. The part will be mailed to your address.

Detach and Mail or Fax the Form Below

PARTS ORDER FORM

Stamina Products, Inc.
2040 N Alliance Ave, Springfield, MO 65803

Mr./Ms: .....

Address: ..... Apt. #:.....

City: ..... State: ..... Zip Code: .....

IMPORTANT : We require your phone number to process the order!

Phone #: ( ) ..... Work Phone #: ( ) .....

Date of Purchase: .....

Model #: .....

Purchased From: .....

IMPORTANT: Before filling out the portion below, make sure you have the correct information.
Refer to the parts list to make sure you're ordering the right parts!

PART #	DESCRIPTION	QUANTITY
EXAMPLE: 1	Rear Unit Assembly	1